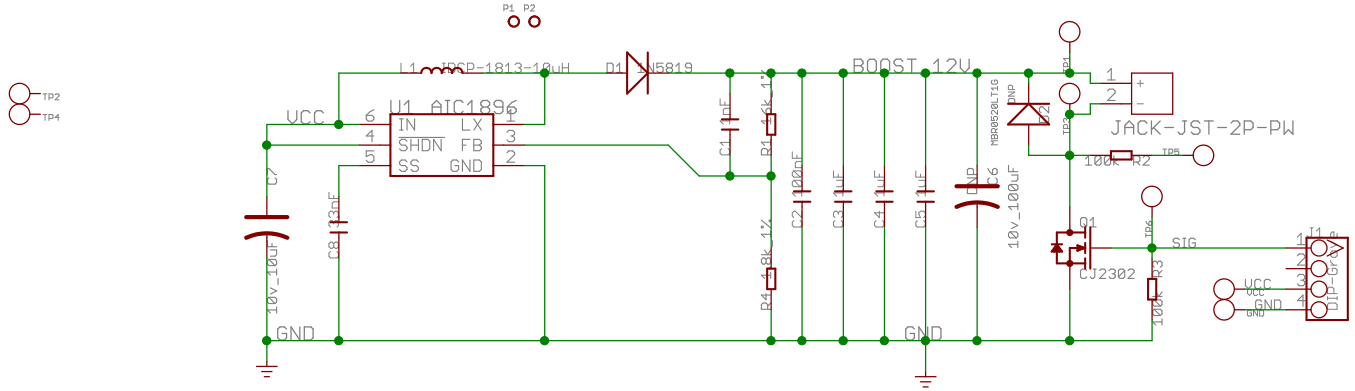

SeeedStudio

TITLE: Grove - LED String Light

Design: Wangcf	Check: Bruce	
Date: 4/22/2014 1:45:36 PM	Vision: v1.0	Sheet: 1/1